▲

SWITCH FUNCTION	
POS. 1	POS. 2
ON	(ON)
1-3	1-2

(ON)=MOMENTARY

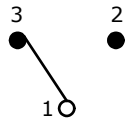

CURCUIT: SPDT

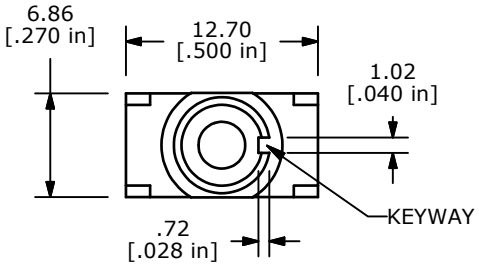

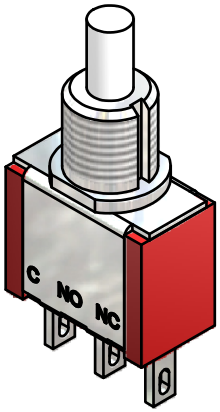

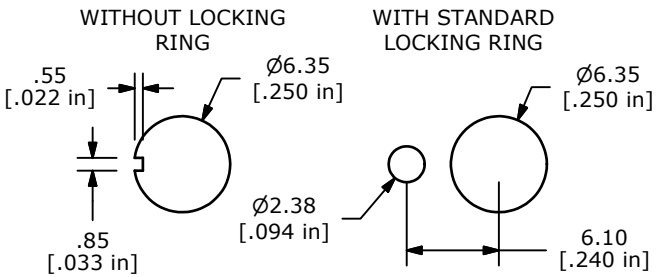

PANEL MOUNTING

NOTE:
1. ALL DIMENSIONS IN MM [INCH]
2. GENERAL TOLERANCE: X.X=±0.4
   X.XX=±0.25
3. TERMINAL NUMBERS FOR REF ONLY
▲4. CONTACT MATERIAL: GOLD
5. RATING: 0.4VA MAX. @ 20 VAC OR VDC MAX.
6. ELECTRIC LIFE: 50,000 MAKE-AND-BREAK CYCLES
   AT FULL LOAD
7. INSULATION RESISTANCE: 1,000 MEGA-OHM MIN.
8. ACUATION FORCE: 300 ± 100gf
▲9. TRAVEL: 1.0 ± 0.2mm
10. CONTACT RESISTANCE: 20 mOHM MAX.
    TYPICAL @ 2-4 VDC
11. DIELECTRIC STRENGTH: 1,000 V RMS @ SEA LEVEL.
12. OPERATING TEMP.: -30°C to 85°C
13. ▲ DENOTES CRITICAL PARAMETER.
14. 2002/95/EC (ROHS) COMPLIANT.
15. HARDWARE TO BE SHIPPED BULK
    T100000 - HEXNUT - QTY 2
    T100011 - LOCKWASHER - QTY 1
    T100015 - LOCKRING - QTY

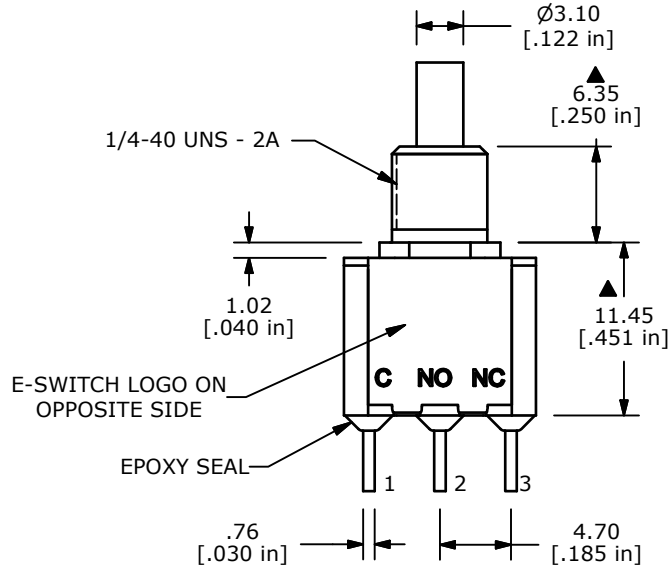

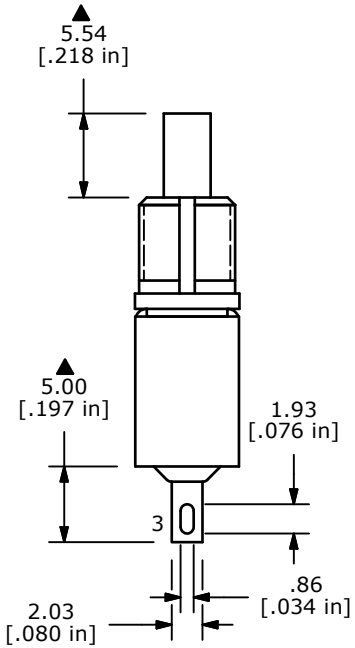

REV	PCR NO	DESCRIPTION	DATE	BY
B	20032	DRAWING CLEAN-UP / UPDATE	6/27/11	BGL
A	16416	RELEASED FOR PRODUCTION	9/8/06	BO

THE INFORMATION CONTAINED IN THIS DOCUMENT IS PROPRIETARY TO E-SWITCH AND IS NOT TO BE COPIED OR TRANSFERRED

E-SWITCH®

TITLE 700SP7B10M1REH

SCALE	DATE	DR	DWG	REV
2:1	9/8/2006	BO	ST711006	B